Concealed Vertical Rod Exit Device

ALP1085

3 YEAR GUARANTEE

Designed for use with narrow stile commercial aluminium doors. The concealed rod model adds to the security of the door. The crossbar is designed with simplicity in mind, yet will provide years of smooth, reliable operation.

Made of high tensile strength aluminum. Non-handed, and a crossbar that is easily adjustable in the field. Also includes the concealed vertical rods, screws and strikes.

Outside lever handle

The ALP1085 comes with the following features

- CE tested to European Standard
- Non-handed
- Easy installation
- Concealed fastening for added security
- Uses standard mortice cylinder with maximum security
- Independent top and bottom bolt action - 13 mm bolt throw
- Trigger action, positive bolt release
- Adjustable bolt guides allow bolt adjustment with door installed
- Foam rubber silencers to quiet rod operation
- Contoured crossbar
- Heavy duty construction
- Wear points insulated by Nylon sleeves and rollers
- Dual dogging feature
- Rod supplied for doors up to 2100mm (Extender rod required for doors up to 2500mm)

Code	Description
ALP1085	Crossbar with concealed vertical rods
ALP8500LV+KA	Outside access lever handle with round cylinder keyed alike
ALP8500LV+KD	Outside access lever handle with round cylinder keyed to differ
ALP1085/EXT	(301347) Extender for vertical rod - 305mm
Finish	Aluminium

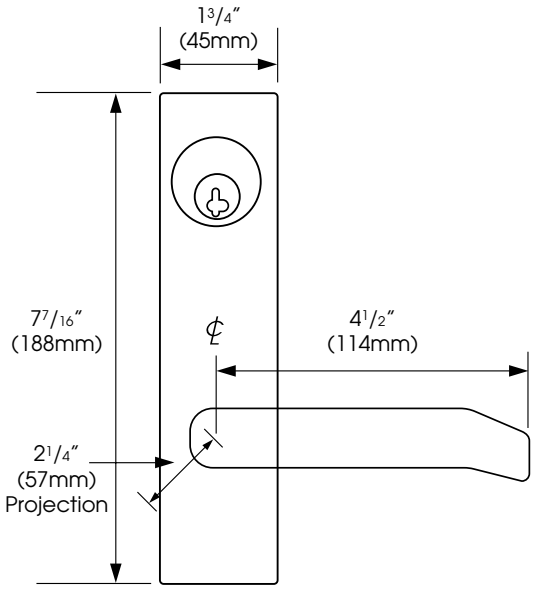

Rim Mounted Exit Device

ALP1095

3 YEAR GUARANTEE

Designed for use with narrow stile commercial aluminium doors. The rim version is fitted with the same field sizeable crossbar as the ALP1085 model, enabling adjustments to be made to suit the overall width of door installation. These units are the perfect solution to the ever growing need for safety.

C Type Strike Plate

The ALP1095 comes with the following features

- CE tested to European Standard
- Easy installation
- Concealed fastening for added security
- Uses standard mortice cylinder with maximum security
- Contoured crossbar
- Dual operating functions
- Heavy duty construction
- Wear points insulated by nylon sleeves and rollers
- Dual dogging feature
- C Type strike plate included

Handed - LHR in stock - RHR subject to special order

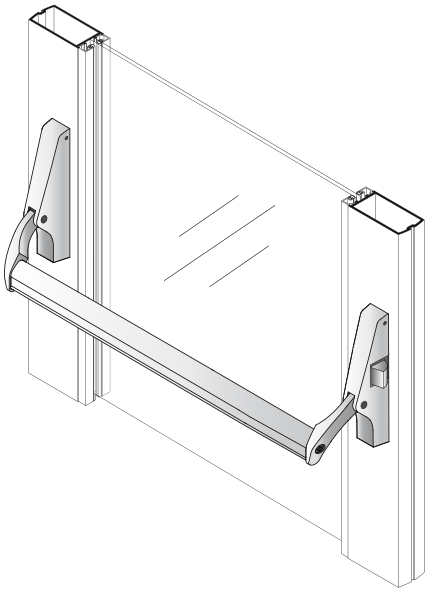

Code	Description
ALP1095	Crossbar rim latch series
Finish	Satin Aluminium

A.1 The producer shall specify the appropriate fixing arrangement for the door types for which the exit device is designed.

A.2 Before fitting an exit device to a door, the door should be checked to ensure correct hanging and freedom from blinding. It is not recommended, for example, that exit devices be fitted to hollow core doors unless specially designed by the producer for this type of door. It is recommended to verify that the door construction allows the use of the device, i.e. to verify that offset hinges and engaging leaves allow both leaves to be opened simultaneously (See A4), or to verify that the gap between door leaves does not differ from that defined by the exit device producer, or to verify that the opening elements do not interfere, etc.

A.3 Before fitting an panic exit device to a fire/smoke resisting door, the fire certification of the fire door assembly on which the exit device has been tested to prove suitability for use on a fire door should be examined. It is of utmost importance that an exit device is not used on a fire door assembly of a greater fire resistance time than approved for.

A.4 Care should be taken to ensure that any seals or weather-stripping fitted to the complete door assembly, do not inhibit the correct operation of the panic exit device.

A.5 On double doorsets with rebated meeting stiles and where both leaves are fitted with panic exit devices, it is essential to check that either leaf will open when its panic exit device is activated and also that both eaves will open freely when both panic exit devices are operated simultaneously.

A.6 Where panic exit devices are manufactured in more than one size, it is important that the correct size is selected.

A.7 Category 2 (Standard projection) panic exit devices should be used in situations where there is restricted width for escape, or where the doors to be fitted with the panic exit devices are not able to open beyond 90°.

A.8 Where a panic exit device is designed to befitted to a glazed door, it is essential that the glazing is tempered or laminated glass.

A.9 Different fixing can be necessary for fitting panic exit devices to wood, metal or frameless glass doors. For more secure fixing, male and female through-door bolts, reinforcement and rivets can be used.

A.10 Panic exit devices are not intended for use on double action (double swing) doors unless specifically designed by the exit device producer.

A.11 The fixing instructions should be carefully followed during installation. These instructions and any maintenance instructions should be passed on by the installer to the user.

A.12 The horizontal bar should normally be installed at a height of between 900 mm and 1100 mm from the finished floor level, when the door is in the secured position. Where it is known that the majority of the users of the premises will be young children, consideration should be given to reducing the height of the operating bar.

A.13 The horizontal bar should be installed so as to provide the maximum effective length.

A.14 The bolt heads and keepers should be fitted to provide secure engagement. Care should be taken to ensure that no projection of the bolt heads, when in the withdrawn position, can prevent the door swinging freely.

A.15 Where panic exit devices are to be fitted to double door sets with rebated meeting stiles and self closing devices, a door coordinator device in accordance with EN 1158 should be fitted to ensure the correct closing sequence of the doors. This recommendation is particularly important with regard to smoke/fire-resisting door assemblies.

A.16 No devices for securing the door in the closed position should be fitted other than specified in this European Standard. This does not preclude the installation of self-closing devices.

A.17 If a door closing device is to be used to return the door to the closed position, care should be taken not to impair the use of the doorway by the young, elderly and infirm.

A.18 Any keepers or protection plates provided should be fitted in order to ensure compliance with this European Standard.

A.19 A sign which reads "Push Bar to open" or a pictogram should be provided on the inside face of the door immediately above the horizontal bar, or on the bar if it has a sufficient flat face to take the size of lettering required. The surface area of the pictogram should be not less than 8000 mm^2 and its colours should be white on a green background. It should be designed such that the arrow points to the operating element, when installed.

Maintenance Instructions

A) Inspect and operate the emergency exit device to ensure that all components are in a satisfactory working condition. Using a force gauge, measure and record the operating forces to release the exit device.

B) Ensure the keeper(s) is (are) free from obstruction.

C) Check that the emergency exit device is lubricated in accordance with the producer's instructions.

D) Check that no additional locking devices have been added to the door since its original installation.

E) Check periodically that all components of the system are still correct in accordance with the list of approved components originally supplied with the system.

F) Check periodically that the operating element is correctly tightened and, using a force gauge, measure the operating forces to release the exit device. Check that the operating forces have not changed significantly from the operating forces recorded when originally installed.